VACUUBRAND®

VARIO®-SP chemistry diaphragm pump MD 1C VARIO-SP



Link to the website

Product description

The three-stage MD 1 VARIO-SP diaphragm pump with its variable speed drive system attains significantly higher pumping speed and a better ultimate vacuum than the corresponding fixed speed pump. The brushless 24V DC motor (maintenance-free) enables easy integration of the pump into other equipment and operation independent of line voltage. The pump is particularly silent and vibration-free, and has an outstanding lifetime of its diaphragms and valves. For exceptional chemical resistance of the pump´s internal flowpath it is also available as a chemistry design version (MD 1C VARIO-SP).

Performance features

- contamination-free pumping and evacuation
- high flow rate even near ultimate vacuum
- VARIO®-SP = variable speed: Fast pump down at high motor speed, maintain vacuum with reduced motor speed
- very powerful and extremely compact; whisper quiet and ultra-low vibration, especially at low speed
- MD 1C VARIO-SP in chemistry design, with gas ballast valve and outstanding chemical resistance and superior vapor tolerance

Technical data are subject to change without notice
© VACUUBRAND GMBH + CO KG | 2026

Link to the website:
https://shop.vacuubrand.com/20696110

Ordering data

Product name	Nominal mains voltage | mains frequency	Plug type	Articleno.
MD 1C VARIO-SP	24 V | DC	Open wires	20696110

Items supplied

Pump completely mounted, ready for use, with 2 m cable without plug and with manual.

Accessories

- Rubber vacuum tubing DN 8 mm (20686001)
- Set of diaphragms and valves for MD 1C, MD 1C VARIO-SP, PC 2001/ 3001 VARIO, MV 0.5C MD 1C, MD 1C +AK+EK, MD 1C VARIO-SP, PC 2001 VARIO, PC 3001 VARIO, MV 0.5C (20696828)

© VACUUBRAND GMBH + CO KG | 2026

Technical data

Max. pumping speed 50 Hz (m^3/h)	1.8 m^3/h
Max. pumping speed 60 Hz (cfm)	1.0 cfm
Ultimate vacuum	2 mbar / 1.5 torr
Ultimate vacumm with gas ballast	4 mbar / 3 torr
Number of heads	4
Number of stages	3
Permissible ambient temperature range (operation)	10 - 40 °C
Permissible ambient temperature range (storage)	-10 - 60 °C
Max. outlet pressure (abs.)	1.1 bar
Inlet connection	Hose nozzle DN 8-10 mm
Outlet connection	Hose nozzle DN 8 mm
Rated motor power	0.064 kW
Motor speed range	200 - 2400 min^{-1}
Protection class IEC 60529	IP 20
Dimensions (L x W x H)	235 mm x 143 mm x 175 mm
Weight	4.2 kg
Noise (sound pressure level) in dBA at 50 Hz or 1500 rpm/62% (VARIO)/1500 rpm (VARIO-SP)/12500 Upm (VACUU·PURE®)	37 dBA
ATEX conformity	II 3/- G Ex h IIC T3 Gc X Internal Atm. only
NRTL certification	Yes

Technical data are subject to change without notice
© VACUUBRAND GMBH + CO KG | 2026

Link to the website:
https://shop.vacuubrand.com/20696110

Pumping speed graph at 50 Hz

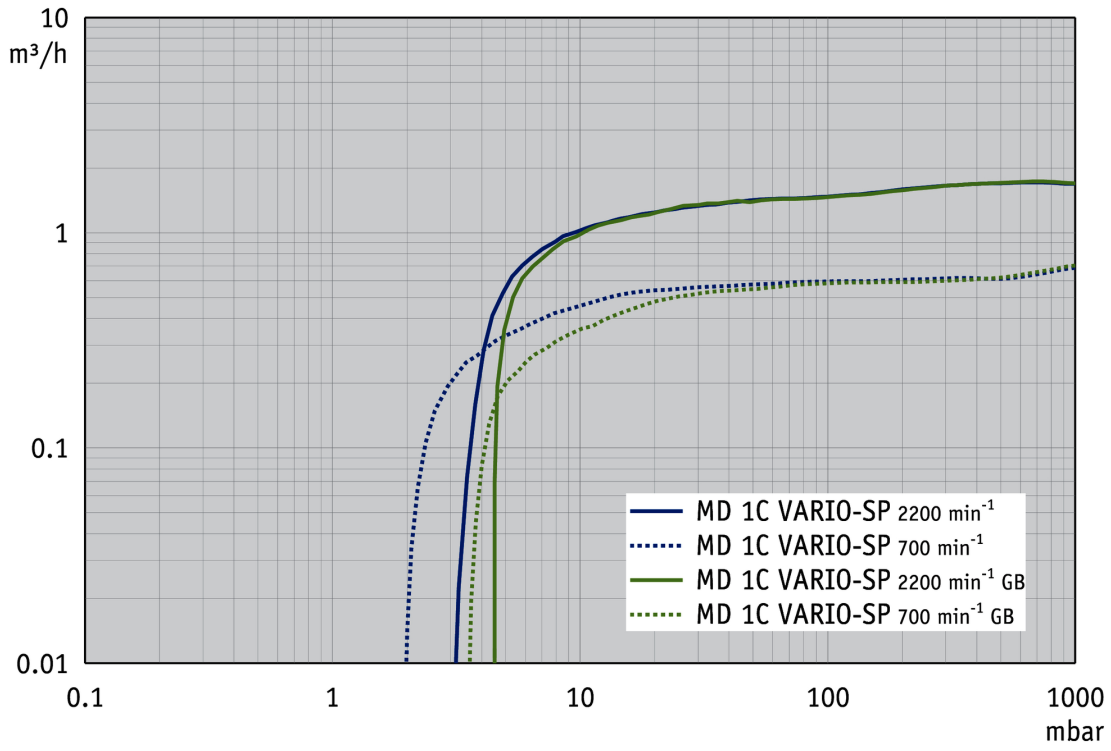

Pump down graph at 50 Hz (10 l volume)

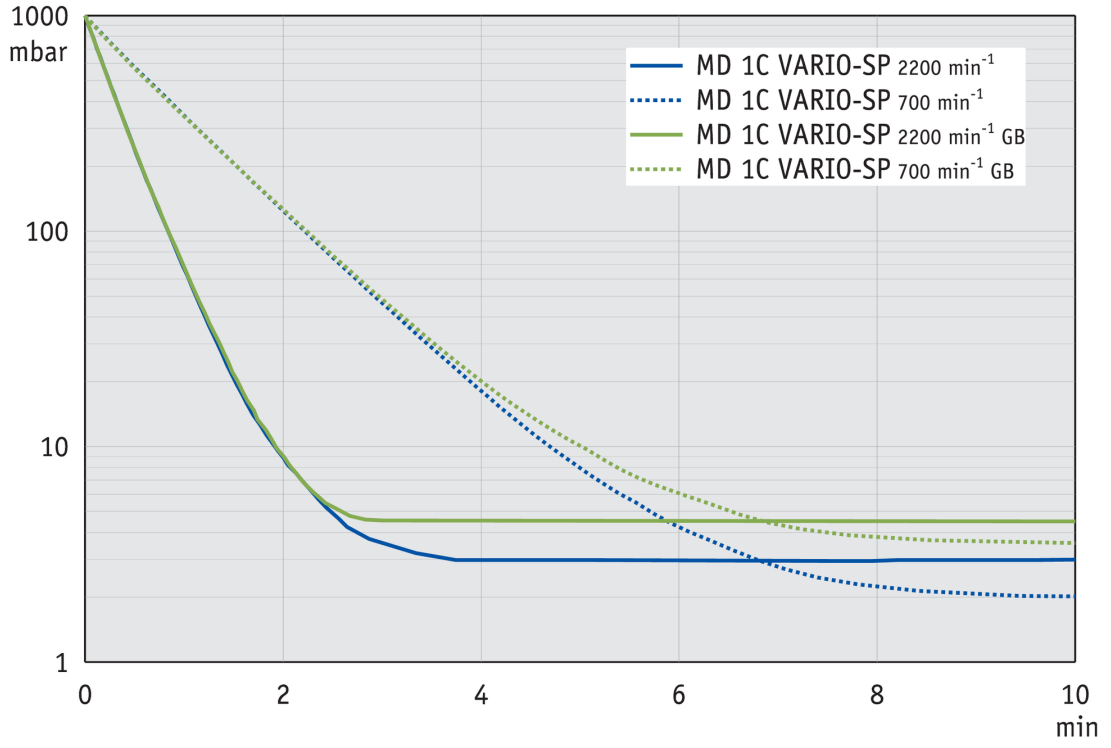

© VACUUBRAND GMBH + CO KG | 2026

Dimension sheet



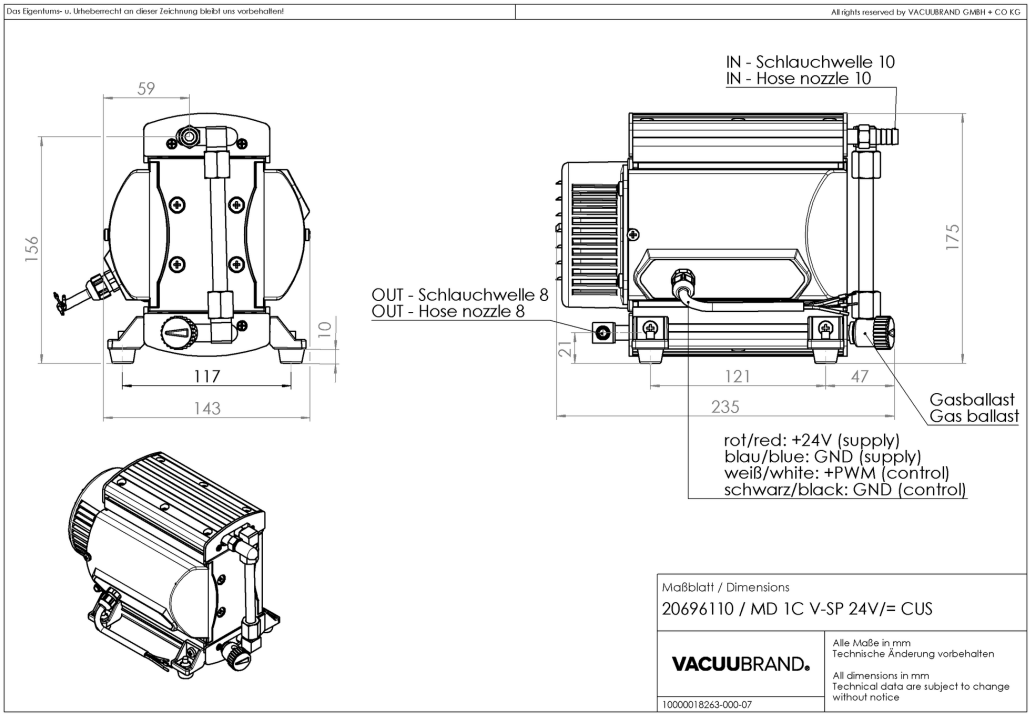

© VACUUBRAND GMBH + CO KG | 2026

Link to the website:
https://shop.vacuubrand.com/20696110

VACUUBRAND GMBH + CO KG
P.O. Box 1664
97877 Wertheim
T +49 9342 808 5550
F +49 9342 808 5555

info@vacuubrand.com
www.vacuubrand.com

VACUUBRAND

VACUUBRAND is part of the Brand group, a manufacturer of high-quality and innovative laboratory equipment and vacuum technology with a global team of approx. 1,000 employees.

With highly motivated and qualified employees, we manufacture the world's most comprehensive product family for vacuum generation, measurement and control for the rough and fine vacuum range in the laboratory.

All with one goal:
Enabling our customers to run reliable, safe and efficient processes. This is why we commit ourselves to continuous innovation, first-class performance, and outstanding quality.

Engineering excellence is central to our ability to deliver products and solutions renowned for their quality, durability, and reliability. Innovative technology, high quality materials and extensive testing deliver unmatched performance - engineered and manufactured in Germany.

Together with you, our experts will find the best solution for your application and provide you with first-class service along the way.

© VACUUBRAND GMBH + CO KG

BRAND (Shanghai) Trading Co., Ltd.
Shanghai, China

T +86 21 6422 2318
info@brand.com.cn
china.brand.com.cn

BRAND Scientific Equipment Pvt. Ltd.
Mumbai, India

T +91 22 42957790
customersupport@brand.co.in
www.brand.co.in

BRANDTECH® Scientific, Inc.
Essex, CT. United States of America

T +1 860 767 2562
info@brandtech.com
www.brandtech.com

BRANDGROUP®