VACUUBRAND®

VARIO®-SP化学真空系统
MD 1C VARIO-SP



网站链接

产品说明

MD 1 VARIO-SP三级隔膜泵采用可变转速驱动系统，具有更大的抽速和更好的极限真空，比相应的固定转速泵有更好的灵活性。无刷24V直流电机（免维护）使泵非常易于集成到系统中，而不必依赖于系统的外接电压。该泵因其超静音设计和超长膜片寿命而与众不同。也有专为化学设计的版本可提供（MD 1C VARIO-SP），其泵的内部气路具有非常好的耐腐蚀性。

性能特点

- 无污染的抽气或排气过程
- 抽速大，即使接近极限真空时仍具有很高的抽气速度
- 可变转速：马达高速转动的时候可快速抽气，马达转速减低时用于维持一定的真空
- 非常强大，结构非常紧凑；工作安静、振动极低，尤其是在低速运转时
- 专为化学设计的MD 1C VARIO-SP泵，配气镇阀，具有卓越的化学耐腐蚀性和蒸汽耐受性

技术参数如有变化,恕不另行通知

© VACUUBRAND GMBH + CO KG | 2026

网站链接:
https://shop.vacuubrand.com/20696110

订购信息

产品名称	额定电源电压|工作频率	电源插头类型	订货号
MD 1C VARIO-SP	24 V | DC	**裸线**	20696110

货品配置

泵体安装完毕，连接即可使用，配2米无插头电缆，附带说明书

配件

- **橡胶真空管** DN 8 mm (20686001)
- **密封圈套装** MD 1C, MD 1C +AK+EK, MD 1C VARIO-SP, PC 2001 VARIO, PC 3001 VARIO, MV 0.5C (20696828)

© VACUUBRAND GMBH + CO KG | 2026

技术指标

50 Hz **最大抽速** (m^3/h)	1.8 m^3/h
60 Hz **最大抽速** (cfm)	1.0 cfm
极限真空	2 mbar / 1.5 torr
极限真空，使用气镇	4 mbar / 3 torr
泵头数	4
泵级数	3
的允许环境温度范围（运行）	10 - 40 °C
的允许环境温度范围（存放）	-10 - 60 °C
最大出气口压力 (绝对压力)	1.1 bar
进气口连接	**软管喷嘴接头** DN 8-10 mm
出气口连接	DN 8 mm **软管喷嘴接头**
额定电机功率	0.064 kW
电机转速范围	200 - 2400 min^{-1}
防护等级	IP 20
尺寸（长x宽x高）	235 mm x 143 mm x 175 mm
重量	4.2 kg
噪音水平 50 Hz/1500 Upm/62% (VARIO)/1500 Upm (VARIO-SP)/12500 Upm (VACUU·PURE®)	37 dBA
ATEX**规格**	II 3/- G Ex h IIC T3 Gc X Internal Atm. only
NRTL **标准**	**是**

技术参数如有变化,恕不另行通知

© VACUUBRAND GMBH + CO KG | 2026

网站链接:
https://shop.vacuubrand.com/20696110

50 Hz下的抽速曲线

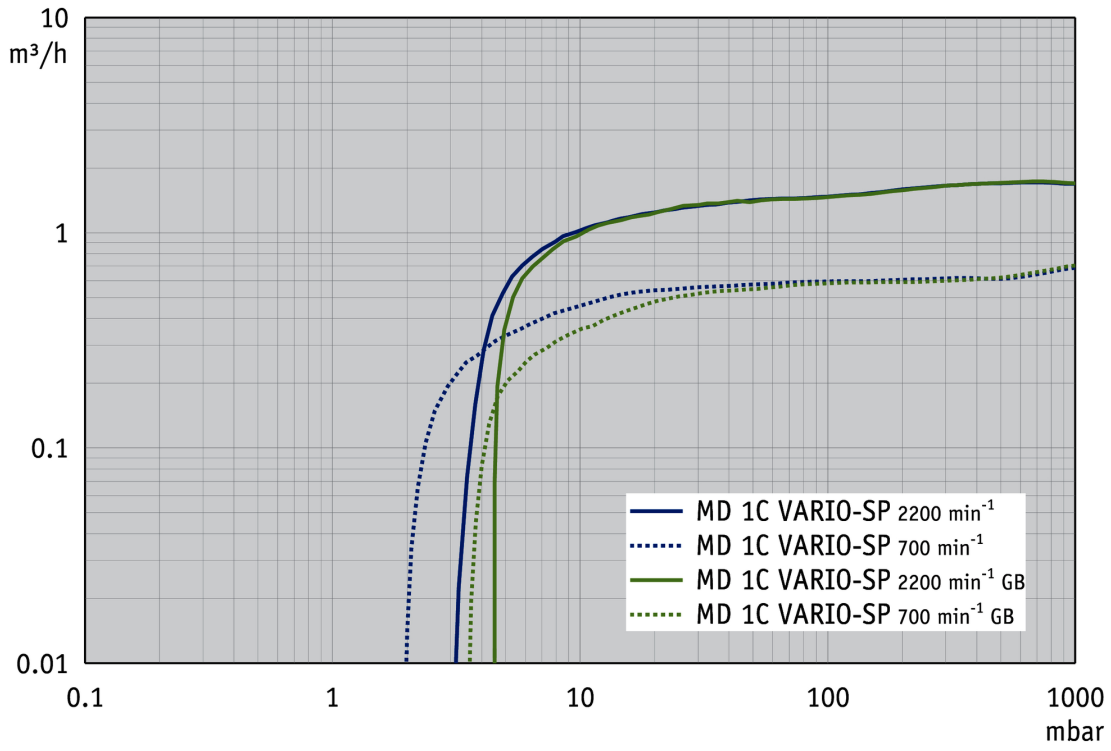

50 Hz下的抽气曲线 （10升容积）

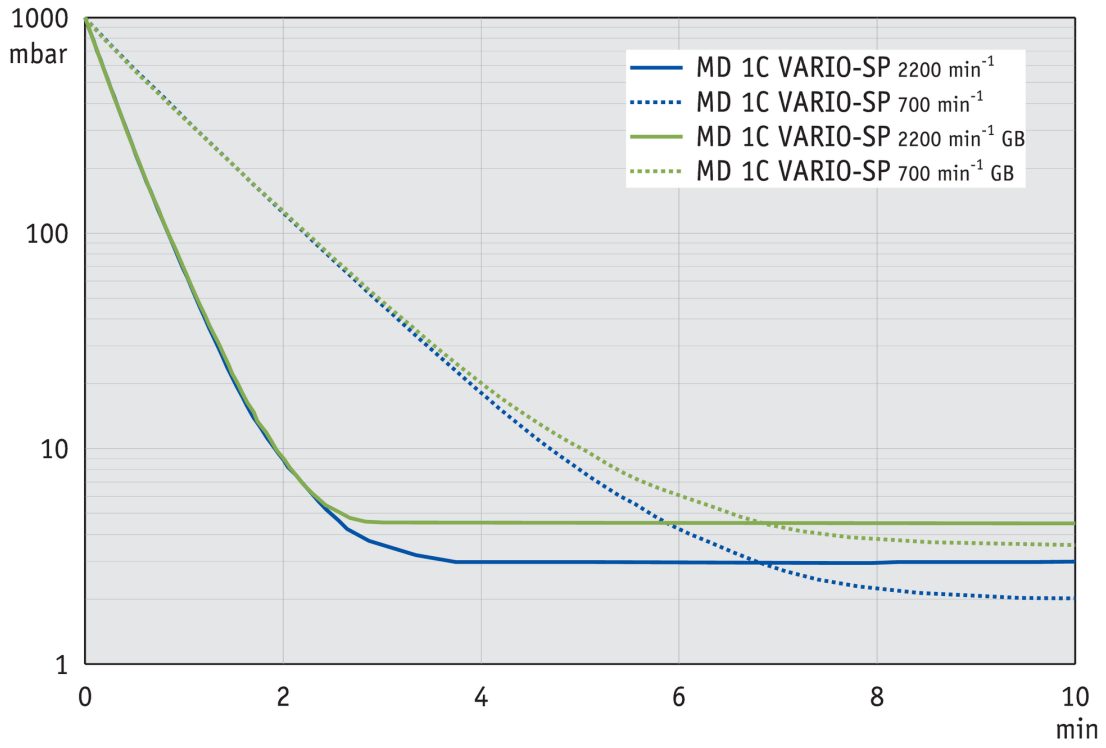

© VACUUBRAND GMBH + CO KG | 2026

尺寸规格表



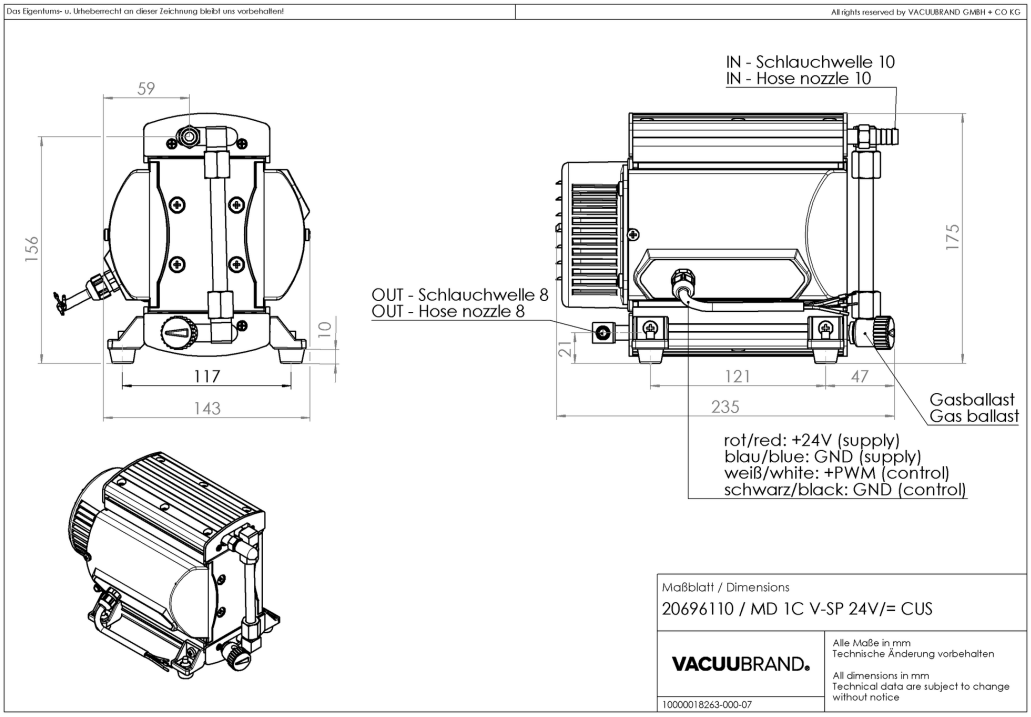

© VACUUBRAND GMBH + CO KG | 2026

网站链接:
https://shop.vacuubrand.com/20696110

VACUUBRAND GMBH + CO KG
P.O. Box 1664
97877 Wertheim
T +49 9342 808 5550
F +49 9342 808 5555

info@vacuubrand.com
www.vacuubrand.com

VACUUBRAND

VACUUBRAND is part of the Brand group, a manufacturer of high-quality and innovative laboratory equipment and vacuum technology with a global team of approx. 1,000 employees.

With highly motivated and qualified employees, we manufacture the world's most comprehensive product family for vacuum generation, measurement and control for the rough and fine vacuum range in the laboratory.

All with one goal:
Enabling our customers to run reliable, safe and efficient processes. This is why we commit ourselves to continuous innovation, first-class performance, and outstanding quality.

Engineering excellence is central to our ability to deliver products and solutions renowned for their quality, durability, and reliability. Innovative technology, high quality materials and extensive testing deliver unmatched performance - engineered and manufactured in Germany.

Together with you, our experts will find the best solution for your application and provide you with first-class service along the way.

© VACUUBRAND GMBH + CO KG

BRAND (Shanghai) Trading Co., Ltd.
Shanghai, China

T +86 21 6422 2318
info@brand.com.cn
china.brand.com.cn

BRAND Scientific Equipment Pvt. Ltd.
Mumbai, India

T +91 22 42957790
customersupport@brand.co.in
www.brand.co.in

BRANDTECH® Scientific, Inc.
Essex, CT. United States of America

T +1 860 767 2562
info@brandtech.com
www.brandtech.com

BRANDGROUP®